13TH OCTOBER, 2022

TO ALL BIDDERS.

ADDENDUM No. 1: TENDER CLARIFICATION FOR ROAD ROUTINE AND PERFORMANCE-BASED MAINTENANCE WORKS FOR TENDER No. KWS/OT/RMLF/04,05,06,07,08,09,10,11,12,13,14,15,16,17,18,19,20,21,22,23,24,25,26,27,28/2022-2023

Pursuant to Section 75 of the PPAD Act (2015) including Instruction To Tenderers Clause 8 of Tender documents for the Routine Maintenance Works & Clause 10 for the Performance-Based Maintenance Works, Kenya Wildlife Service wishes to make the following Clarifications/Amendments: -

S/No	TENDER NO.	OBSERVATION (S)	AMENDMENT (S) / CLARIFICATION(S)
1	KWS/OT/RMLF/19/2022-2023	Cover Page	Delete the words "REHABILITATION AND PERFORMANCE BASED MAINTENANCE OF AHMED GATE-KARARE GATE ROAD E827/KFS JUNCT-PHQS- BADASSA JUNCT/LAKE PARADISE-AJARMAKO IN MARSABIT NATIONAL PARK" appearing on the cover page and replace with the following words "REHABILITATION AND PERFORMANCE BASED MAINTENANCE OF SHAMATA GATE-KAHEHO WATER FALLS-AIRSTRIP/ KWA MURURI-SHAMATA/ NGOBIT-RHINO GATE- IN ABERDARE NATIONAL PARK"
2	KWS/OT/RMLF/04,14,19,20,27,28/2022-2023	SECTION II – TENDER DATA SHEET(TDS) ITT 8.1: Pre-Tender Meeting Date	Delete the line "Date: Tuesday, 25th October, 2022" and replace with "Date: Tuesday, 12th October, 2022"
3	KWS/OT/RMLF/10/2022-2023	Bill of Quantities (BoQ) for Mtito Andei (A109) – Salaita (A23) Road E693 appearing in page 87	For bill item 07-60-029 a. Delete the description of item activity: *"…1m x 1m x 1m…"* and replace with *"…2m x 1m x 1m…"* b. Delete the unit "m^3" and replace with "m^2" c. Delete the quantity:

S/No	TENDER NO.	OBSERVATION (S)	AMENDMENT (S) / CLARIFICATION(S)
			"*574,000*" and replace with "*500*"
4	KWS/OT/RMLF/04 to 28/2022-2023	Section VII - Drawings	Delete the provided Drawings and replace them with the ones appearing on Pg. 3 to Pg. 19 of this Addendum
5	KWS/OT/RMLF/16/2022-2023	Unit of Measurement for Item of Work in Bill of quantities	Pg. 90 . Item no. 01-80-029- Delete the words "Sum" and replace with "No."
6	KWS/OT/RMLF/23/2022-2023	Section VII - Drawings	For the Bridges drawings, use the Standard Drainage Structures Manual, Part 1 (Section 1A & Section 1B), 1987 published by the Ministry of Transport and Communications
7	KWS/OT/RMLF/04/2022-2023, KWS/OT/RMLF/14/2022-2023, KWS/OT/RMLF/19/2022-2023, KWS/OT/RMLF/20/2022-2023,	Item A of the SUMMARY PAGES of Bill of Quantities	Summations should include all the individual road sections highlighted in the respective tables
8	KWS/OT/RMLF/19/2022-2023,	Unit of Measurement for Item of Work in Bill of quantities	1. Pg 62; Item no. 01-80-029- Delete the words "PC Sum" and replace with "%" 2. Pg 59; Item 10-60-001, Delete the unit " "M^2 " and replace with "M^3 "
9	KWS/OT/RMLF/21/2022-2023,	Unit of Measurement for Item of Work in Bill of quantities	Pg 89; Item no. 01-50-017- Delete the words "PC Sum" and replace with "%"

Note:

- This Addendum shall be construed to form part of the tender document
- The closing date for all tenders is hereby extended from **Tuesday 25th October 2022** to **Friday 28th October 2022.** The venue and time of closing remain as earlier advertised.
- All other conditions of the tender remain the same.

DEPUTY DIRECTOR SUPPLY CHAIN MANAGEMENT

DRAWINGS

FIGURE C.1 - CROSS SECTION A (MINOR STANDARD CROSS-SECTION)

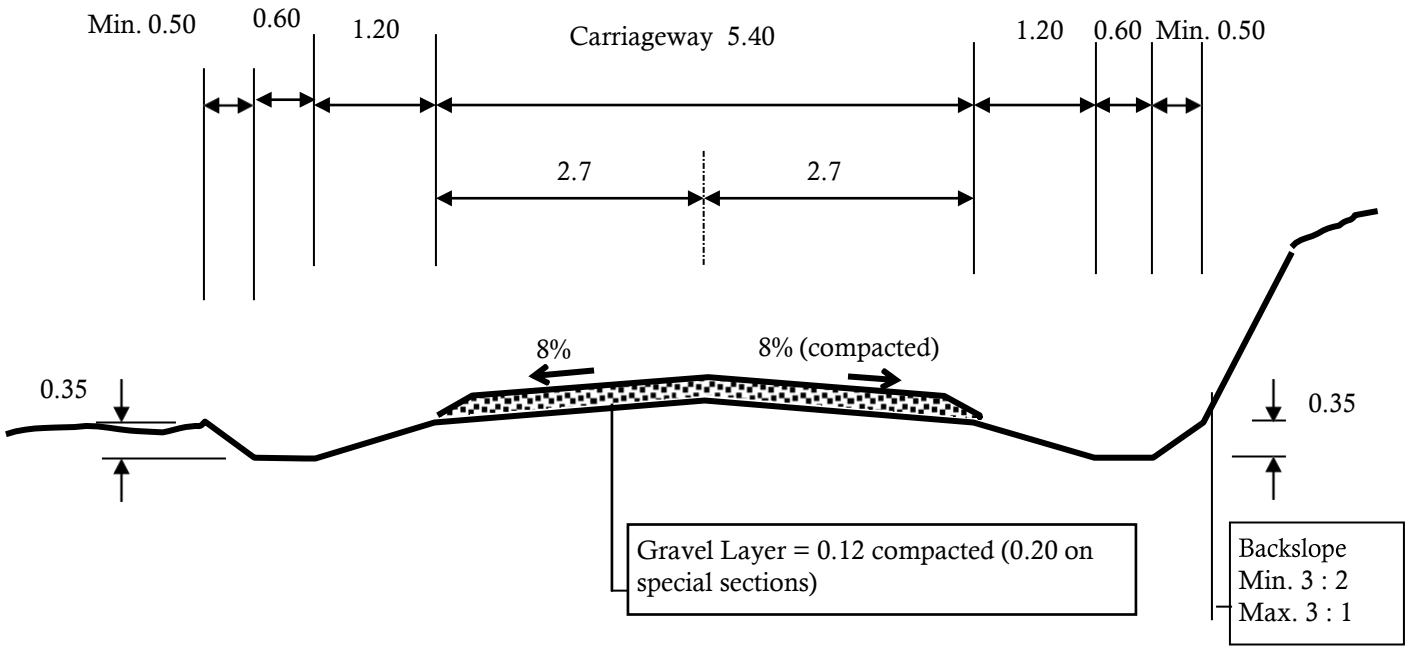

NOTE:

- ALL SPECIFIED DIMENSIONS IN m.

- TRAFFIC LEVELS OF MORE THAN 200 VPD MAY JUSTIFY RUNNING SURFACE WIDTH INCREASE TO 6.50 METRES

FIGURE C.2 - CROSS SECTION B (REDUCED CROSS-SECTION)

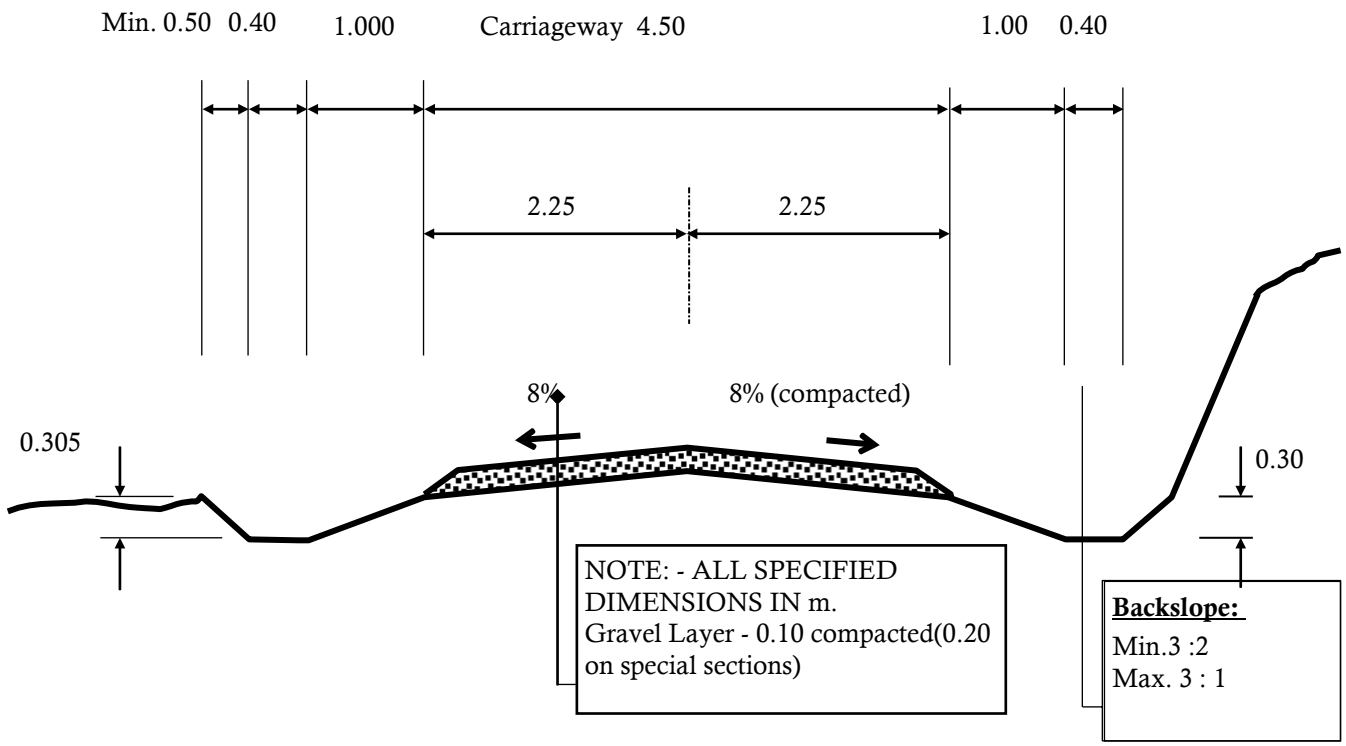

FIGURE C.3 - MITRE DRAINS

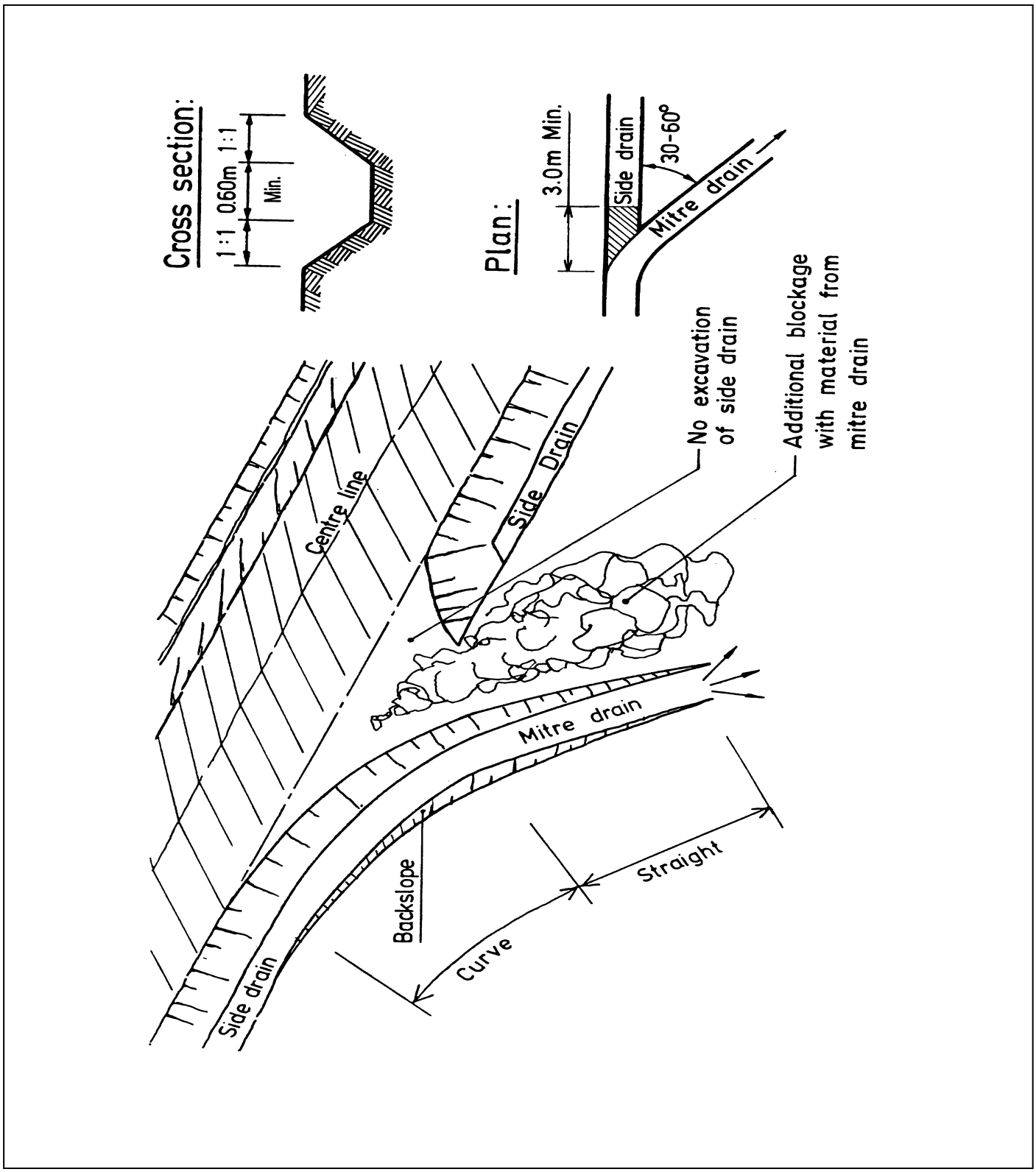

FIGURE C.4 - SCOUR CHECKS

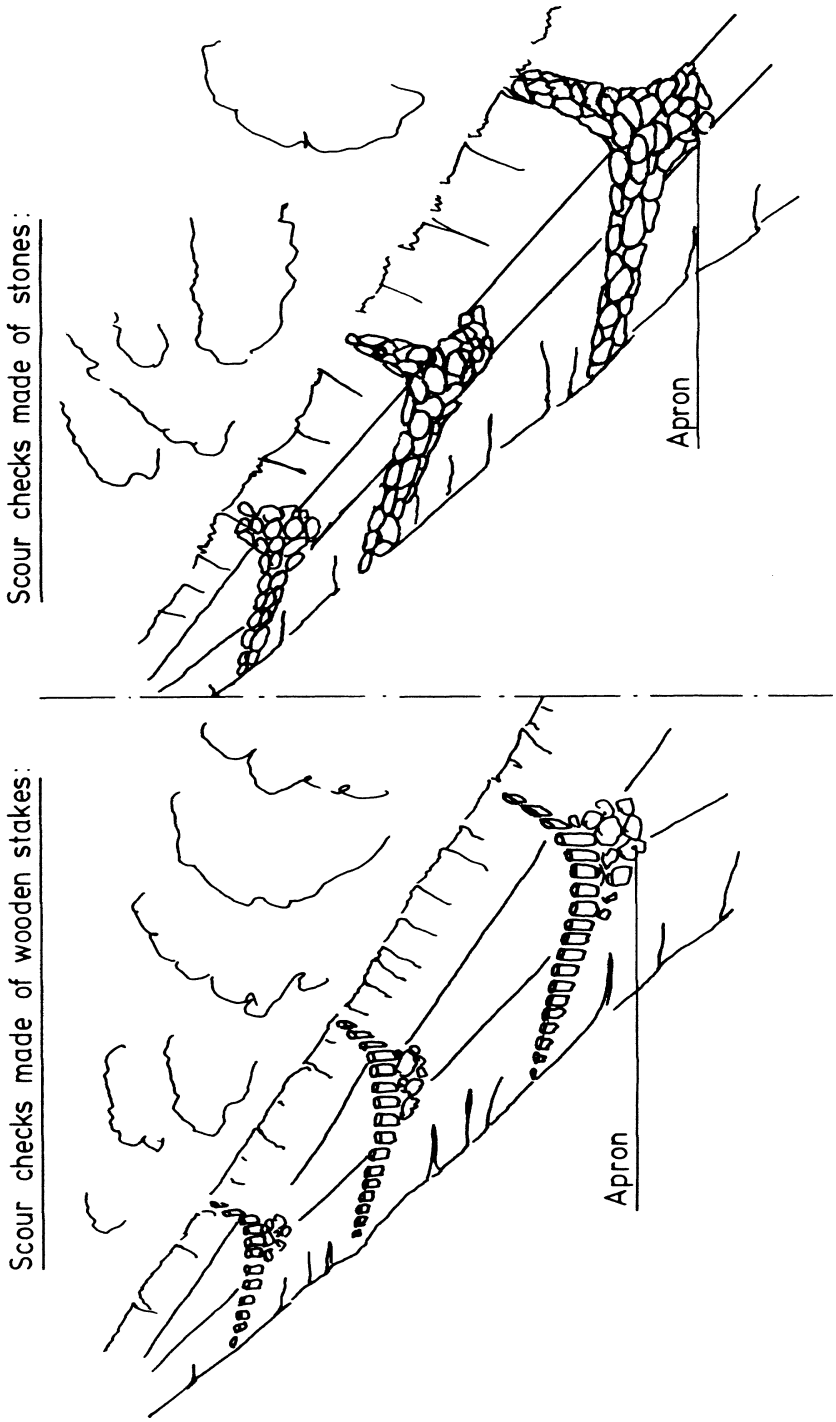

FIGURE C.5 - DIMENSIONS OF SCOUR CHECKS FOR STANDARD DRAIN

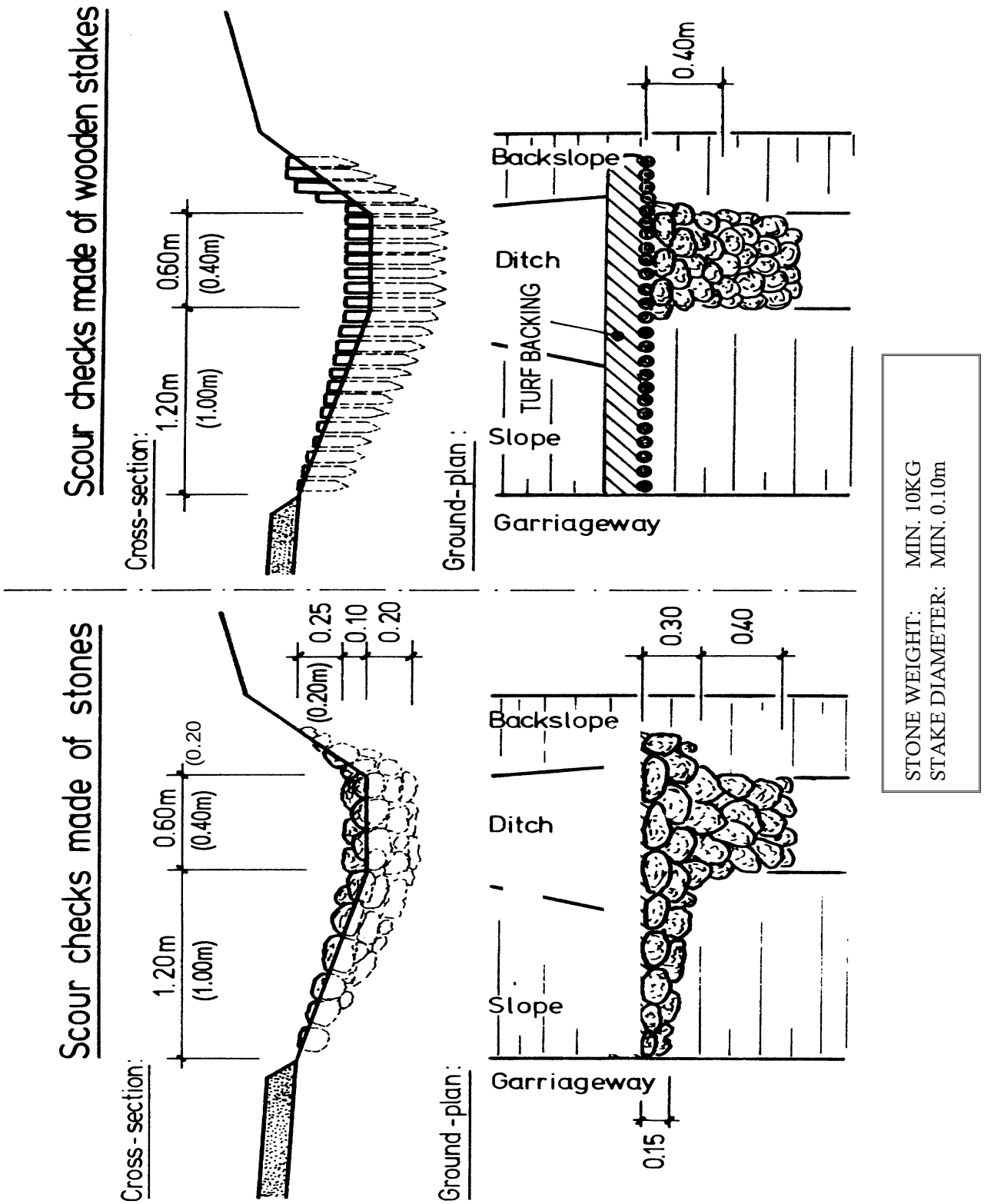

FIGURE C.6 - MASONRY SCOUR CHECKS

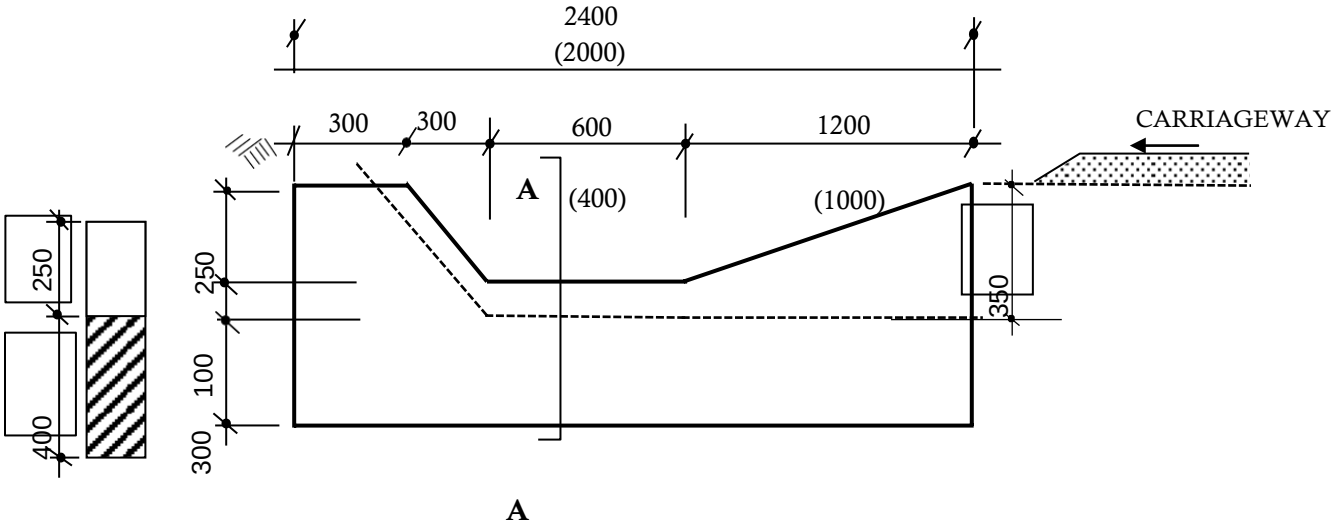

A

A - A

A SECTION OF MASONRY SCOUR CHECKS

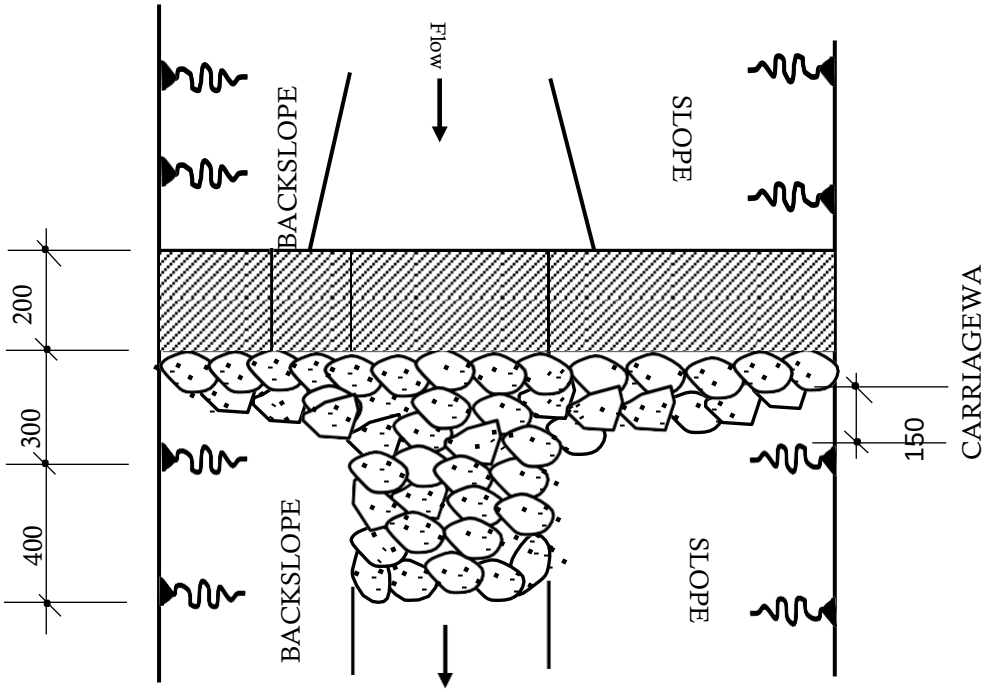

PLAN OF DRAIN WITH EROSION CHECKS

QUANTITIES TABLE

Cross-Section	Sizes in mm			Excavation (m^3)	Stone masonry (m^3)	Apron stone pitching(m^3)
	Length	Width	Depth			
A	2400	200	550	0.22	0.25	0.18
B	2000	200	500	0.18	0.2	0.14

FIGURE C.7 - CULVERT ENTRY / EXIT STRUCTURE TYPES

TYPE 1 (ENTRY AND EXIT)

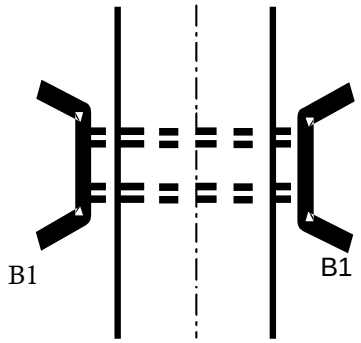

TYPE 3 (ENTRY AND EXIT)

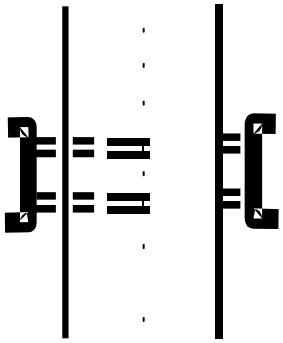

TYPE 2 (ENTRY ONLY!)

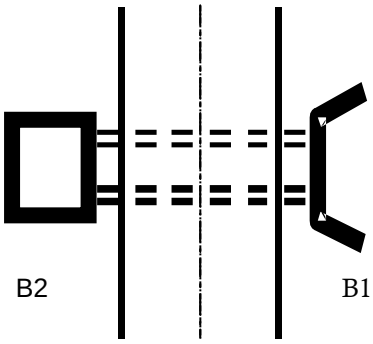

TYPE 4 (ENTRY AND EXIT ON ACCESS)

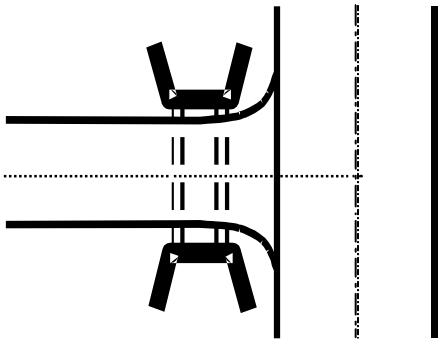

NOTE:

Coding system has been used in describing the standardized designs of the various culvert entry and exit structures. The code names consist of anumber to specify shape and function as elaborated in above while the used construction materials are identified through an alphabetic symbol asfollows:

A	**=**	**Concrete block**
B	**=**	**Stone masonry**
C	**=**	**Dressed stones**

An example code of "B2" would therefore stand for a drop inlet type structure to be built in stone masonry.

FIGURE C.8 - HEADWALL TYPE 1(HEAD AND WINGWALLS)

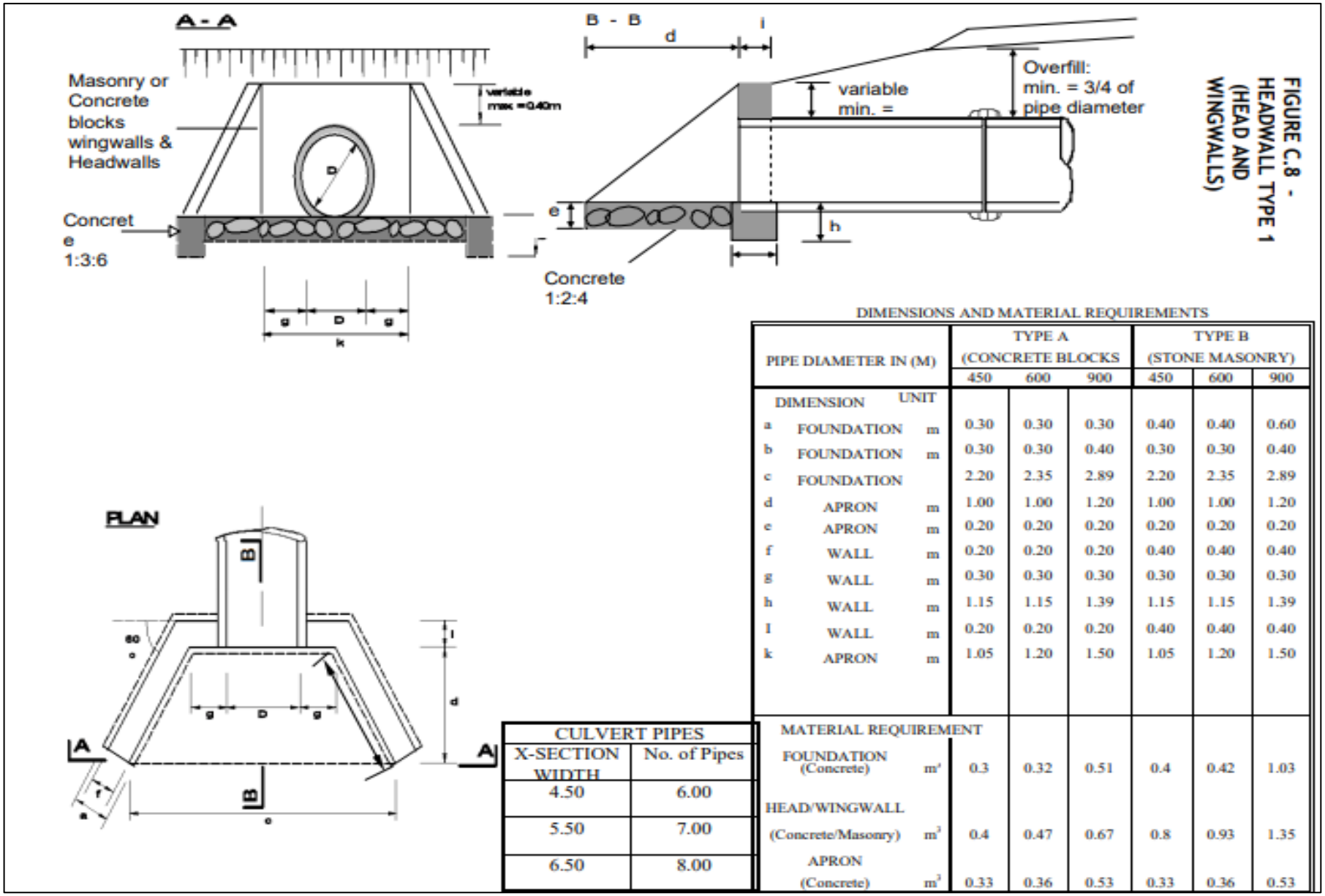

DIMENSIONS AND MATERIAL REQUIREMENTS

PIPE DIAMETER IN (M)			TYPE A (CONCRETE BLOCKS			TYPE B (STONE MASONRY)		
			450	600	900	450	600	900
DIMENSION		UNIT						
a	FOUNDATION	m	0.30	0.30	0.30	0.40	0.40	0.60
b	FOUNDATION	m	0.30	0.30	0.40	0.30	0.30	0.40
c	FOUNDATION		2.20	2.35	2.89	2.20	2.35	2.89
d	APRON	m	1.00	1.00	1.20	1.00	1.00	1.20
e	APRON	m	0.20	0.20	0.20	0.20	0.20	0.20
f	WALL	m	0.20	0.20	0.20	0.40	0.40	0.40
g	WALL	m	0.30	0.30	0.30	0.30	0.30	0.30
h	WALL	m	1.15	1.15	1.39	1.15	1.15	1.39
I	WALL	m	0.20	0.20	0.20	0.40	0.40	0.40
k	APRON	m	1.05	1.20	1.50	1.05	1.20	1.50
MATERIAL REQUIREMENT								
FOUNDATION (Concrete)		m^3	0.3	0.32	0.51	0.4	0.42	1.03
HEAD/WINGWALL (Concrete/Masonry)		m^3	0.4	0.47	0.67	0.8	0.93	1.35
APRON (Concrete)		m^3	0.33	0.36	0.53	0.33	0.36	0.53

CULVERT PIPES	
X-SECTION WIDTH	No. of Pipes
4.50	6.00
5.50	7.00
6.50	8.00

FIGURE C.9 - HEADWALL TYPE 2 (DROP INLET)

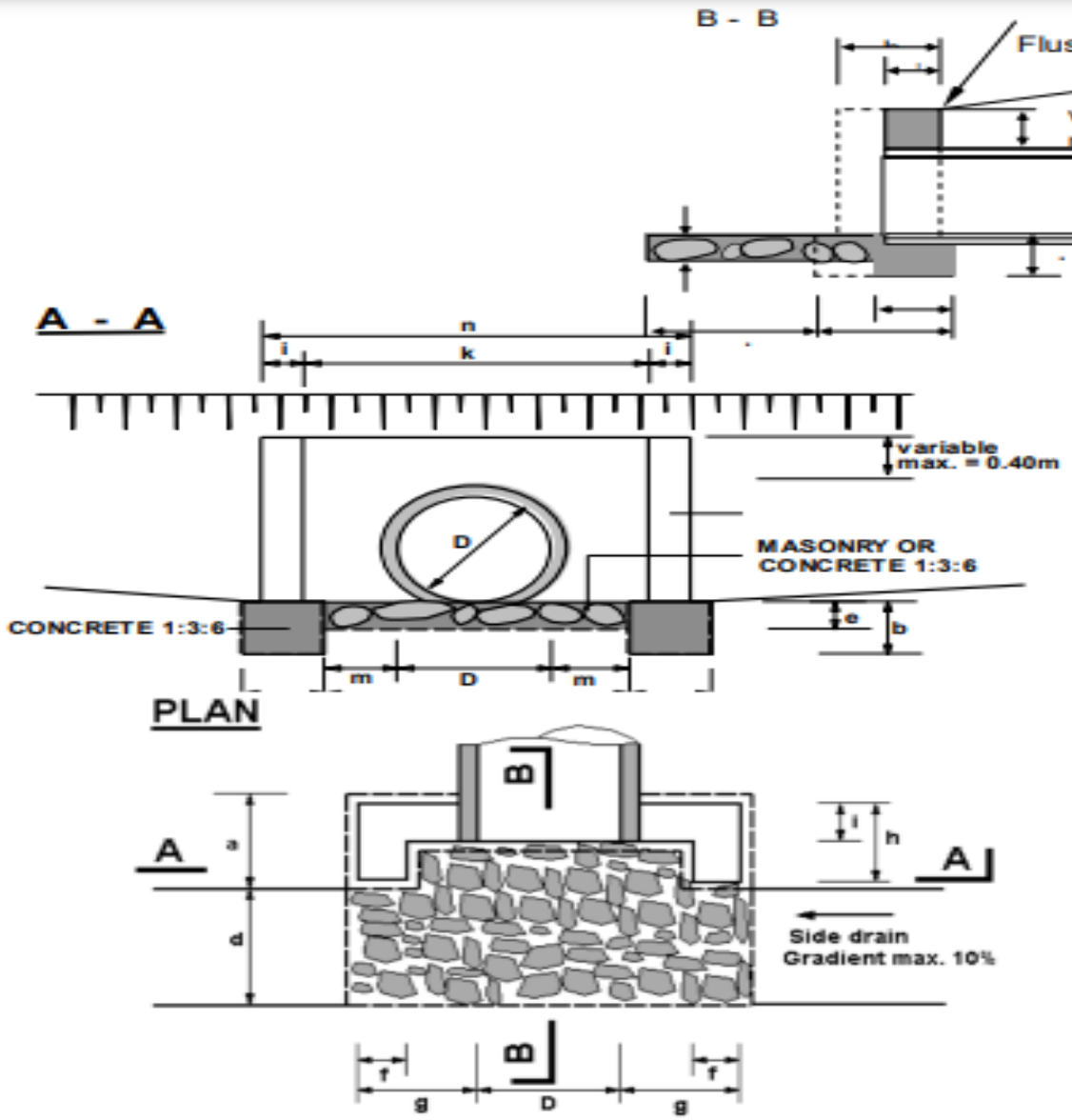

DIMENSIONS AND MATERIAL REQUIREMENTS

PIPE DIAMETER IN (M)			TYPE A (CONCRETE BLOCKS		
			450	600	
DIMENSION		UNIT			
a	FOUNDATION	m	0.50	0.50	
b	FOUNDATION	m	0.30	0.30	
c	FOUNDATION		1.55	1.70	
d	APRON	m	0.60	0.60	
e	APRON	m	0.20	0.20	
f	HEADWALL	m	0.20	0.20	
g	HEADWALL	m	0.50	0.50	
h	HEADWALL	m	0.40	0.40	
I	HEADWALL	m	0.20	0.20	
k	HEADWALL	m	1.05	1.20	
l	FOUNDATION	m	0.95	1.10	
m	FOUNDATION	m	0.25	0.25	
n	HEADWALL	m	1.45	1.60	
o	FOUNDATION	m	0.30	0.30	
MATERIAL REQUIREMENT					
FOUNDATION (Concrete)		m^3	0.23	0.19	
HEAD/WINGWALLS (Concrete/Masonry		m^3	0.31	0.34	
APRON (Concrete)		m^3	0.95	0.99	

FIGURE C.10 - HEADWALL TYPE 3A (CONCRETE BLOCK HEADWALLS)

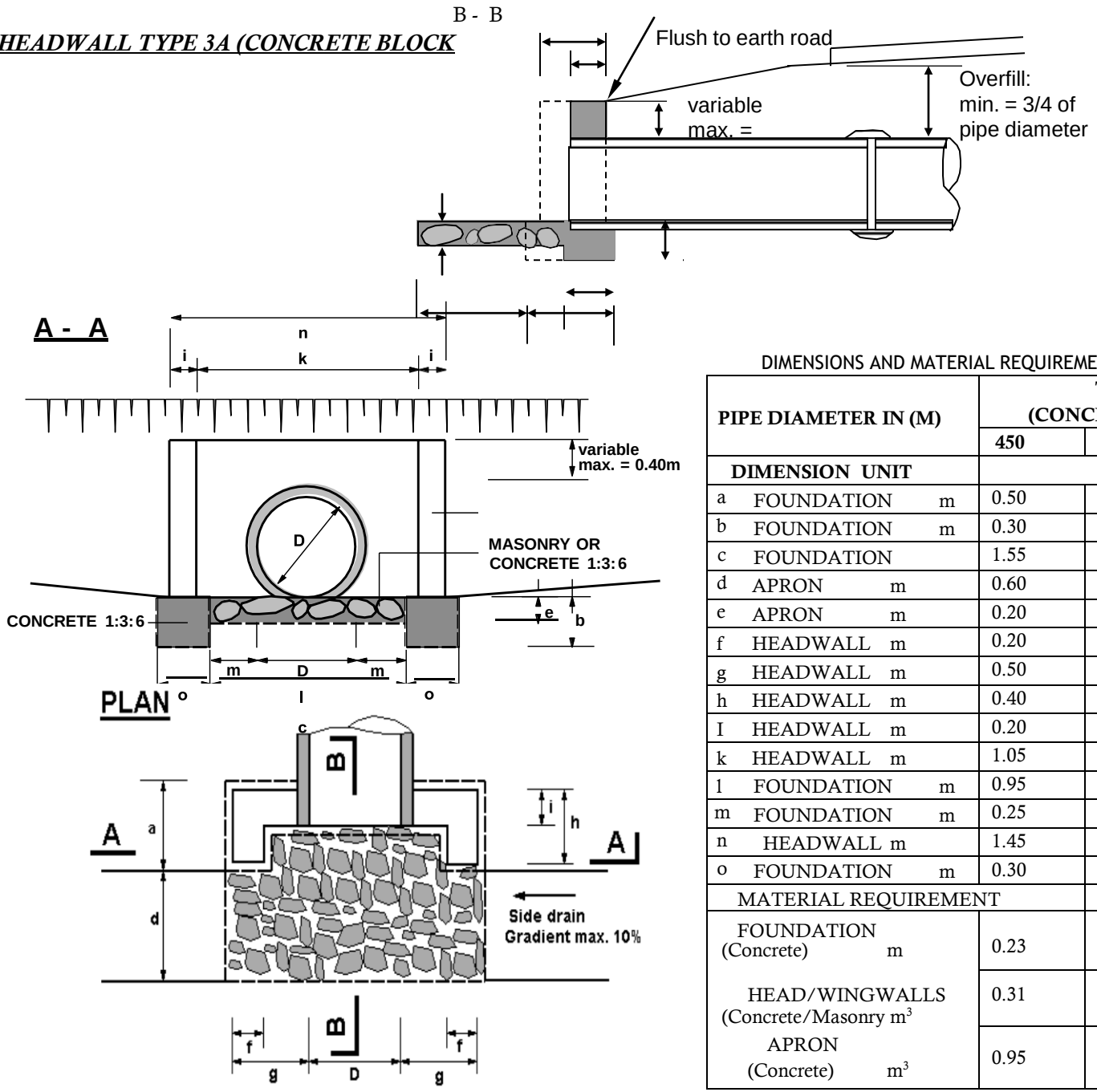

DIMENSIONS AND MATERIAL REQUIREMENTS

PIPE DIAMETER IN (M)			TYPE A (CONCRETE BLOCKS	
			450	600
DIMENSION	UNIT			
a	FOUNDATION	m	0.50	0.50
b	FOUNDATION	m	0.30	0.30
c	FOUNDATION		1.55	1.70
d	APRON	m	0.60	0.60
e	APRON	m	0.20	0.20
f	HEADWALL	m	0.20	0.20
g	HEADWALL	m	0.50	0.50
h	HEADWALL	m	0.40	0.40
I	HEADWALL	m	0.20	0.20
k	HEADWALL	m	1.05	1.20
l	FOUNDATION	m	0.95	1.10
m	FOUNDATION	m	0.25	0.25
n	HEADWALL	m	1.45	1.60
o	FOUNDATION	m	0.30	0.30
MATERIAL REQUIREMENT				
FOUNDATION (Concrete)		m	0.23	0.19
HEAD/WINGWALLS (Concrete/Masonry		m^3	0.31	0.34
APRON (Concrete)		m^3	0.95	0.99

B -

FIGURE C.11 - HEADWALL TYPE3B (STONE MASONRY HEADWALLS)

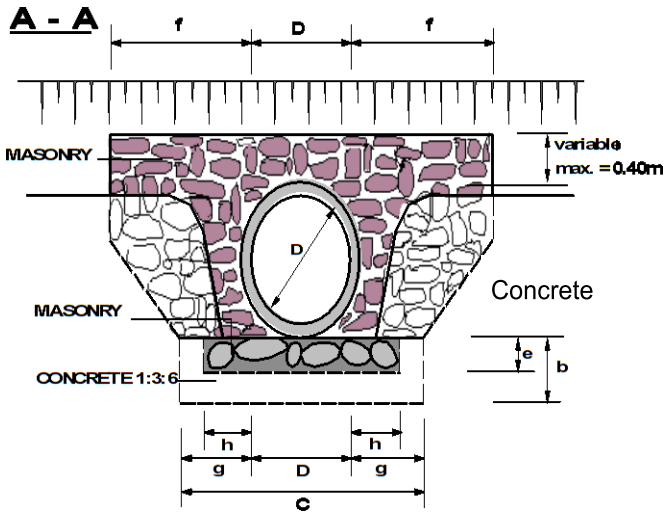

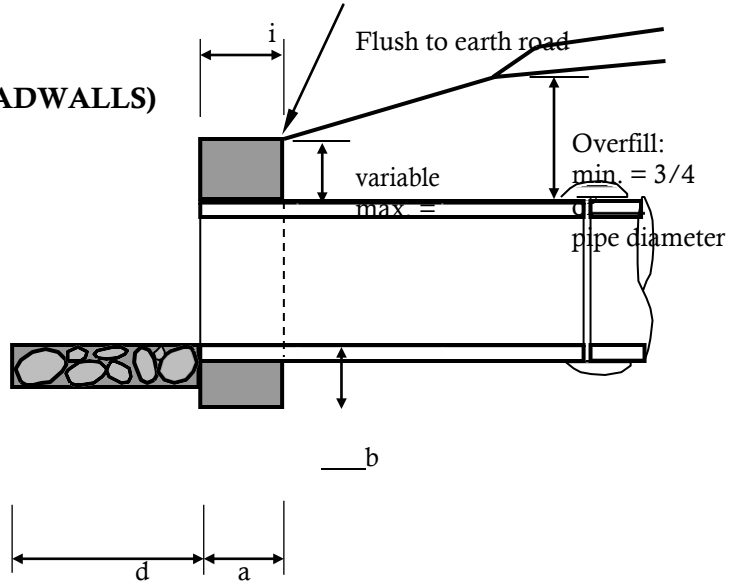

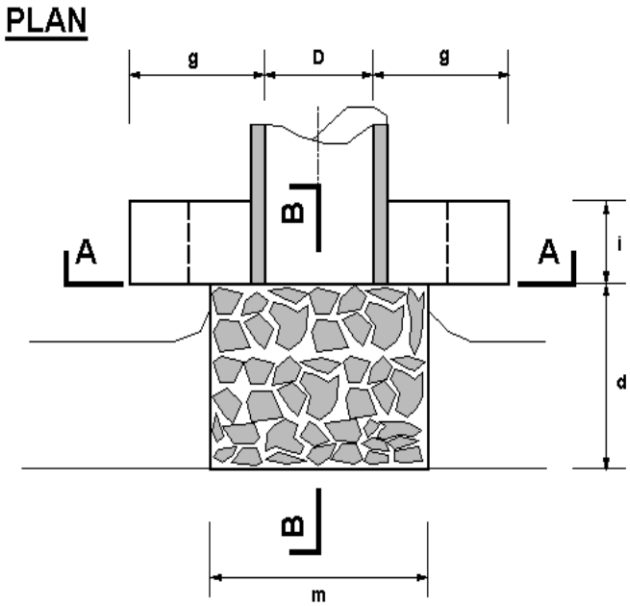

PIPE DIAMETER IN (M)			TYPE B (CONC. BLOCKS)	
			450	600
DIMENSION		UNIT		
a	FOUNDATION	m	0.40	0.40
b	FOUNDATION	m	0.30	0.30
c	FOUNDATION		1.55	1.70
d	APRON	m	0.90	0.90
e	APRON	m	0.20	0.20
f	HEADWALL	m	0.75	0.75
g	HEADWALL	m	0.50	0.50
h	HEADWALL	m	0.30	0.30
I	HEADWALL	m	0.40	0.40
m	FOUNDATION	m	1.05	1.20
MATERIAL REQUIREMENT				
FOUNDATION (Concrete 1:3:6)		m^3	0.19	0.2
HEAD/WINGWALLS (Concrete/Masonry)		m^3	0.62	0.69
APRON (Concrete 1:2:4)		m^3	0.19	0.22

FIGURE C.12 - HEADWALL TYPE 4 (FOR ACCESS CULVERTS)

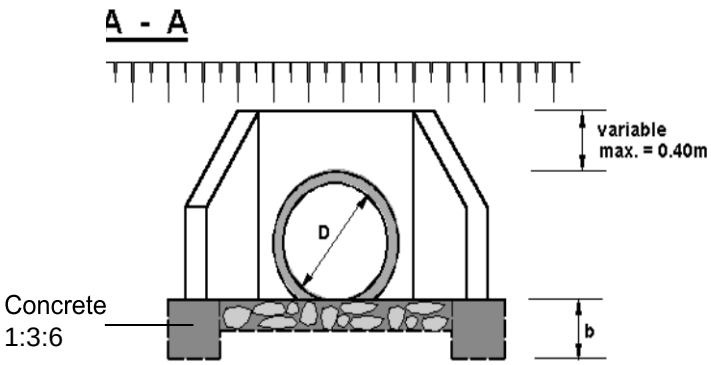

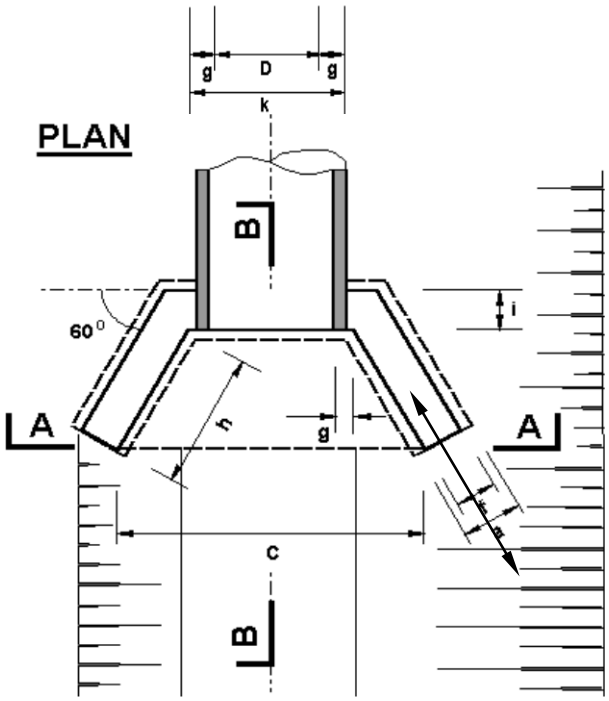

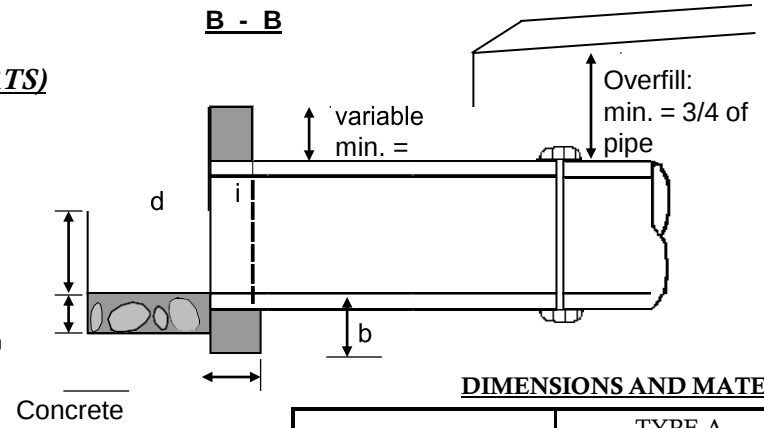

DIMENSIONS AND MATERIAL REQUIREMENTS

PIPE DIAMETER IN (M)			TYPE A (CONCRETE BLOCKS)			TYPE B (STONE MASONRY)		
			450	600	900	450	600	900
DIMENSION		UNIT						
a	FOUNDATION	m	0.30	0.30		0.40	0.40	
b	FOUNDATION	m	0.30	0.30		0.30	0.30	
c	APRON	m	1.34	1.49		1.34	1.49	
d	APRON	m	0.60	0.60		0.60	0.60	
e	APRON	m	0.20	0.20		0.20	0.20	
f	WINGWALLS	m	0.20	0.20		0.40	0.40	
g	WINGWALLS	m	0.10	0.10		0.10	0.10	
h	HEADWALLS	m	0.69	0.69		0.69	0.69	
I	HEADWALLS	m	0.20	0.20		0.40	0.40	
k	HEADWALLS	m	0.65	0.80		0.65	0.80	
I	HEADWALLS	m	0.40	0.40		0.40	0.40	
MATERIAL REQUIREMENT								
FOUNDATION (Concrete 1:2:4, 1:3:6)		m^3	0.18	0.2		0.24	0.26	
HEAD/WINGWALLS (Concrete/Masonry		m^3	0.25	0.29		0.50	0.58	
APRON (Concrete)		m^3	0.12	0.14		0.12	0.14	

FIGURE C.13 – BEDDING AND HAUNCH PROFILES TYPES I & II

PROFILE I

(CONCRETE)

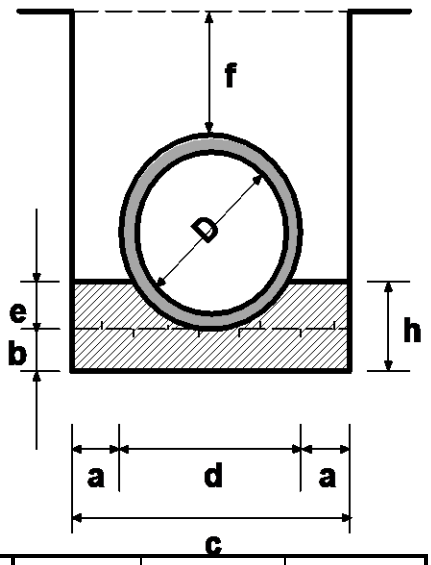

PROFILE II

(CONCRETE)

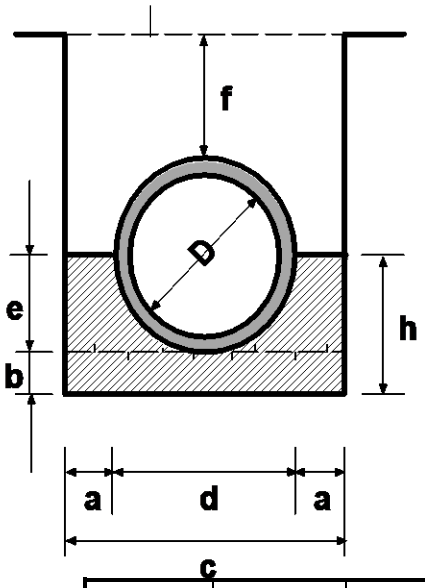

Diameter (D)	450 (mm)	600 (mm)	900 (mm)
Dimensions in (m)			
a	0.15	0.2	0.2
b	0.1	0.15	0.15
c	0.86	1.12	1.48
d	0.56	0.72	1.08
e	0.14	0.18	0.27
f (min.)	0.34	0.45	0.68
g	-	-	-
h	0.24	0.33	0.42
i	-	-	-
Concrete	**Volume in (m^3/m)**		
	0.16	0.3	0.48
Application	- Fair subgrade condition; - Overfill > ¾ Diameter; - Seasonal waterflow only.		
Remarks	- Use gravel material for back/ overfill.		

450 (mm)	600 (mm)	900 (mm)
Dimensions in (m)		
0.15	0.2	0.2
0.1	0.15	0.15
0.86	1.12	1.48
0.56	0.72	1.08
0.28	0.36	0.54
0.34	0.45	0.68
-	-	-
0.38	0.51	0.69
-	-	-
Volume in (m^3/m)		
0.2	0.37	0.56
- Fair to poor subgrade Condition; - Overfill > ¾ Diameter; - Seasonal waterflow only.		
- Use gravel material for back/ overfill.		

FIGURE C.14 - BEDDING AND HAUNCH PROFILES TYPES III & IV

PROFILE III

(CONCRETE)

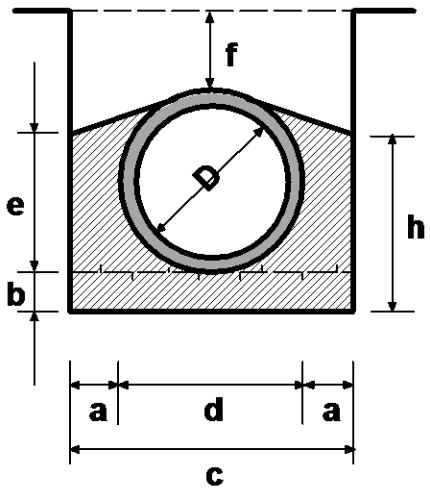

PROFILE IV

(CONCRETE)

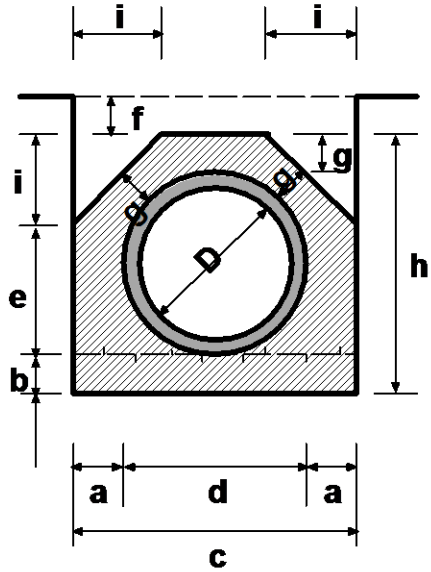

Diameter (D)	**450 (mm)**	**600 (mm)**	**900 (mm)**
Dimensions in (m)			
a	0.15	0.2	0.2
b	0.1	0.15	0.15
c	0.86	1.12	1.48
d	0.56	0.72	1.08
e	0.42	0.54	0.81
f (min.)	0.23	0.3	0.45
g	-	-	-
h	0.52	0.69	0.96
i	-	-	-
Concrete	**Volume in (m^3/m)**		
	0.26	0.47	0.71
Application	- Fair subgrade condition; - Overfill > ¾ Diameter; - Seasonal waterflow only.		
Remarks	- Use gravel material for back/ overfill.		

450 (mm)	**600 (mm)**	**900 (mm)**
Dimensions in (m)		
0.15	0.2	0.2
0.1	0.15	0.15
0.86	1.12	1.48
0.56	0.72	1.08
0.46	0.52	0.78
0.15	0.15	0.15
0.15	0.15	0.15
0.81	1.02	1.38
0.28	0.35	0.45
Volume in (m^3/m)		
0.37	0.61	0.92
- Fair to poor subgrade Condition; - Overfill > ¾ Diameter; - Seasonal waterflow only.		
- Use gravel material for back/ overfill.		

FIGURE C.15 ACCESS DRIFT

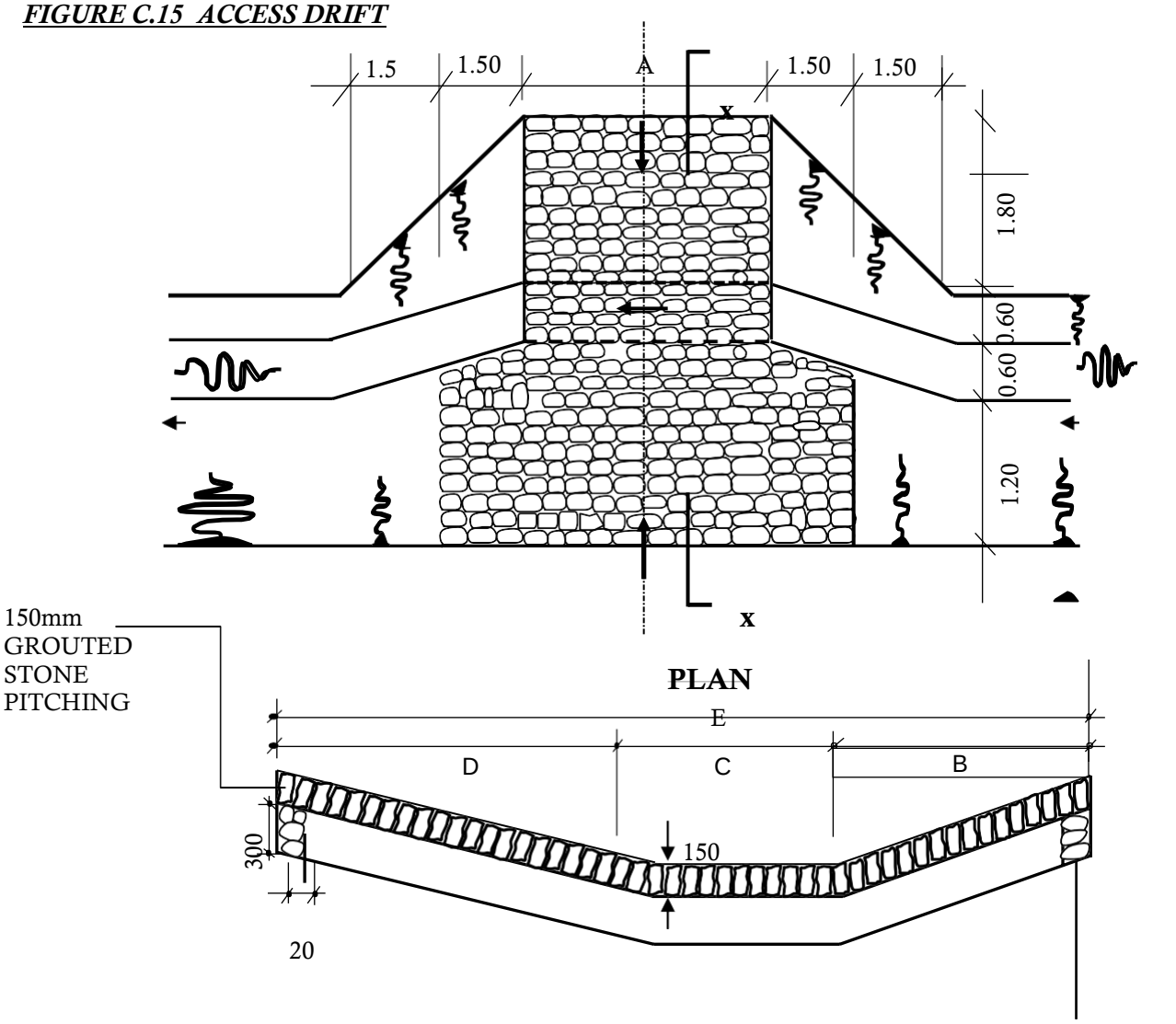

X-SECTION X-X

STONE MASONRY TOES ON FOUR SIDES OF STRUCTURE (200X300mm)

STONE MASONRY TOES ON FOUR SIDES OF THE DRIFT

QUANTITIES TABLE								
Cross Section	**DIMENSIONS (MM)**					**Excavation (m^3)**	**Stone masonry (m^3)**	**150mm Groutedstone pitching (m^3)**
	A	B	C	D	E			
A	4000	1800	600	1800	4200	7.50	1.30	21.75
	6000	1800	600	1800	4200	10.00	1.60	30.15
B	4000	1400	400	1800	3600	7.00	1.20	18.30
	6000	1400	400	1800	3600	9.00	1.50	25.50

FIGURE C.16 - TRAFFIC SIGNS

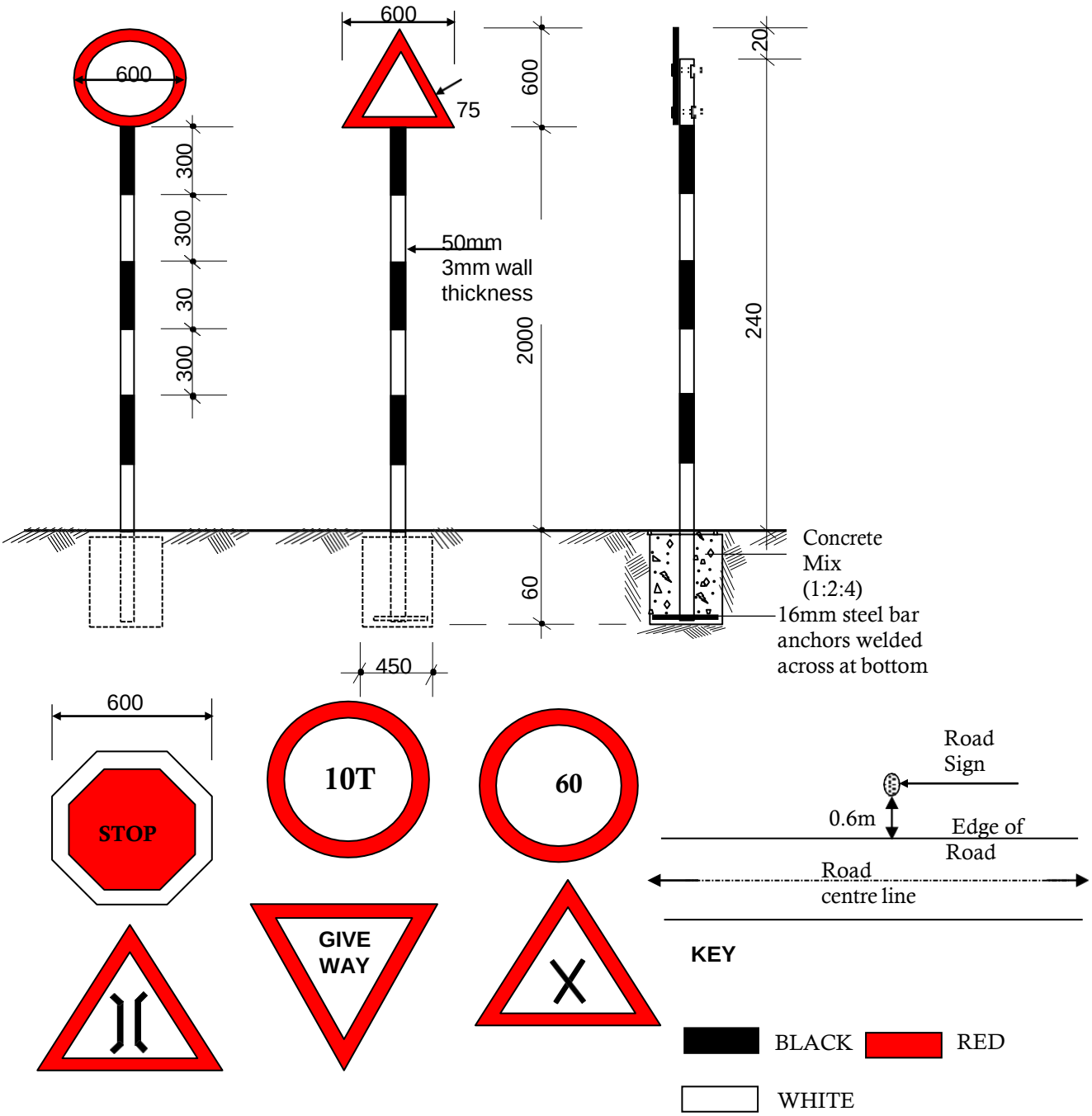

1. The type of sign required and their location shall be as shown on the improvement plan and as directed by the Engineer
2. Sign plate to be 2 mm thick mild steel plate
3. Sign post to be 50 mm internal diameter steel pipe with wall thickness of 3 mm.
4. Sign plate to fixed to steel tube by 4 Nos M10 bolts and 2 Nos 50 mm f fixing clamps/brackets.
5. Sign paints shall be reflective.
6. The sign plate and post shall be treated by applying two coats of lead red oxide paint before applying priming and two finish coats of approved paints. Paints used shall have a hard, durable and glossy finish.

FIGURE C.17 - PUBLICITY SIGNBOARD

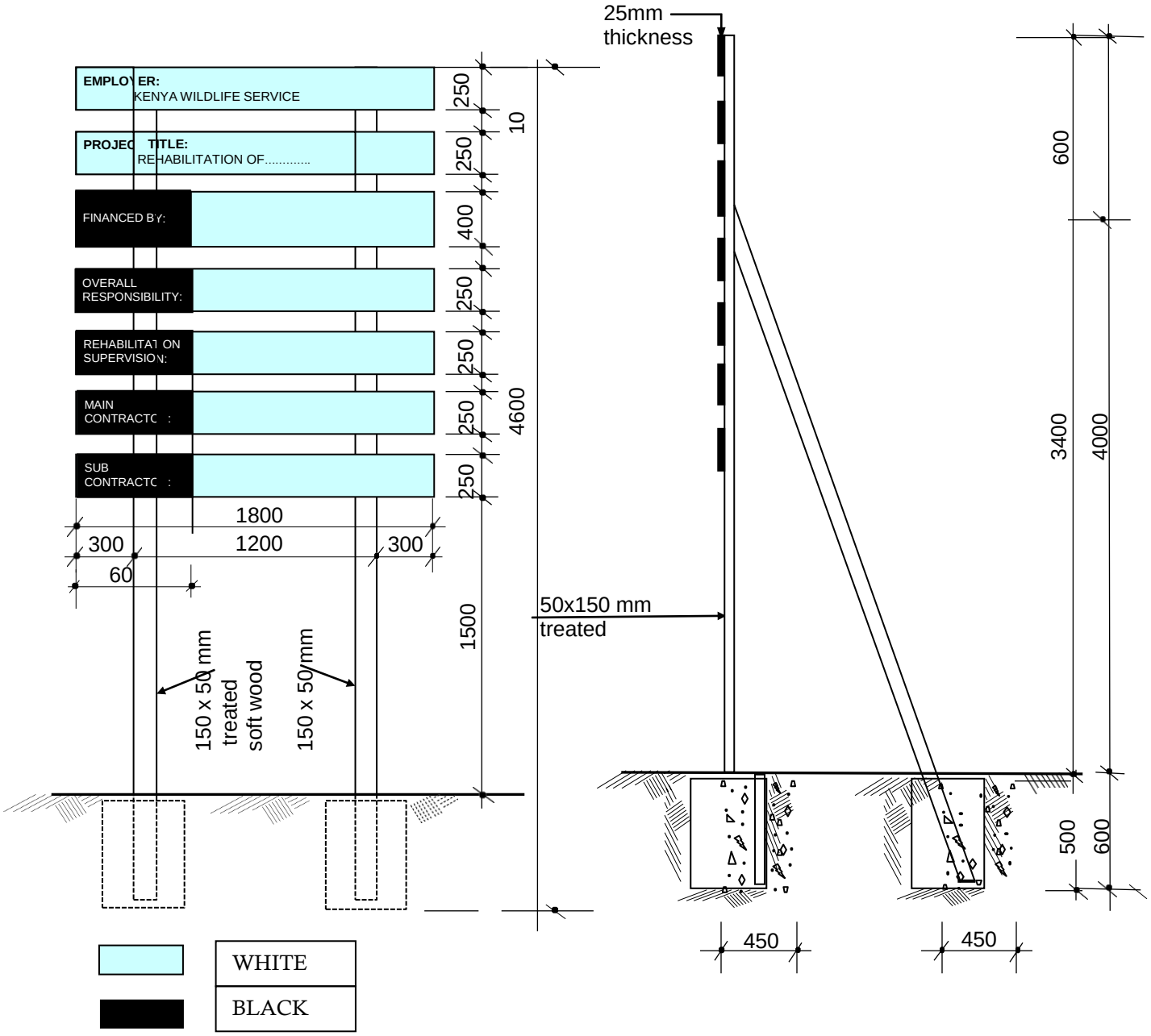

NOTES

1. The wording of the project signboard and the location to be installed to be as directed by the Engineer
2. Materials to be used for fabrication of signboard shall be pressure impregnated treated softwood timbersizes as indicated in the drawing
3. Wording boards to be nailed to the posts using nails.
4. Project board posts and struts to be embedded in concrete ratio 1:2:4